Broadband Beamforming

Bhaskar D Rao
University of California, San Diego
Email: brao@ucsd.edu

Broadband Signals

Narrow band signals: $\tilde{f}(t-\tau)e^{j\omega_c(t-\tau)} \approx \tilde{f}(t)e^{j\omega_c(t-\tau)}$, for $\tau << T = \frac{1}{2B}$

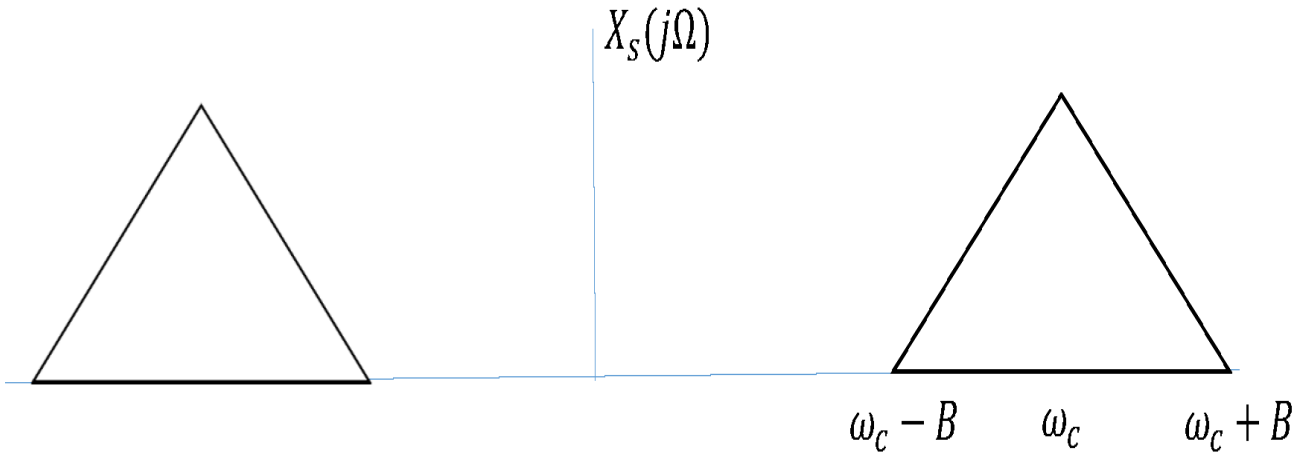

The signal becomes broadband if the bandwidth becomes large and the delay across the array can no longer be considered small compared to the sampling interval

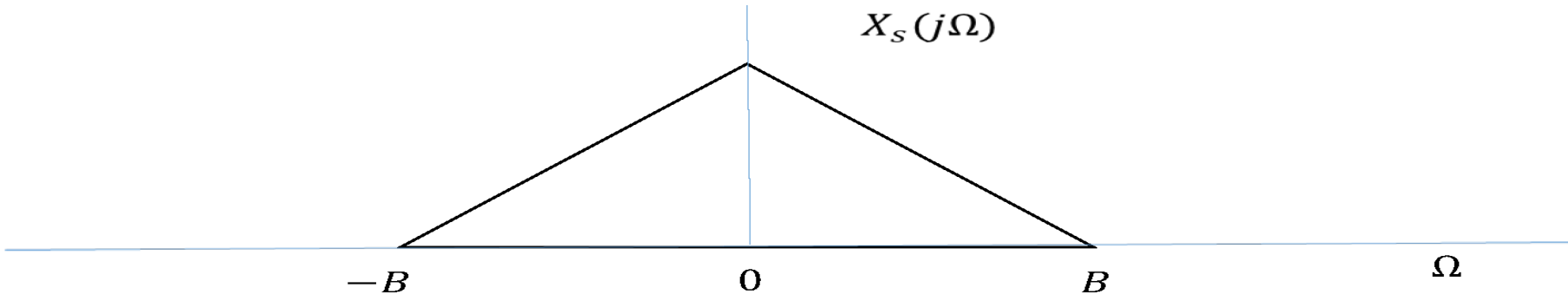

Signals such as speech signals are naturally baseband signals and are broadband in nature

Delay and Sum beamformer

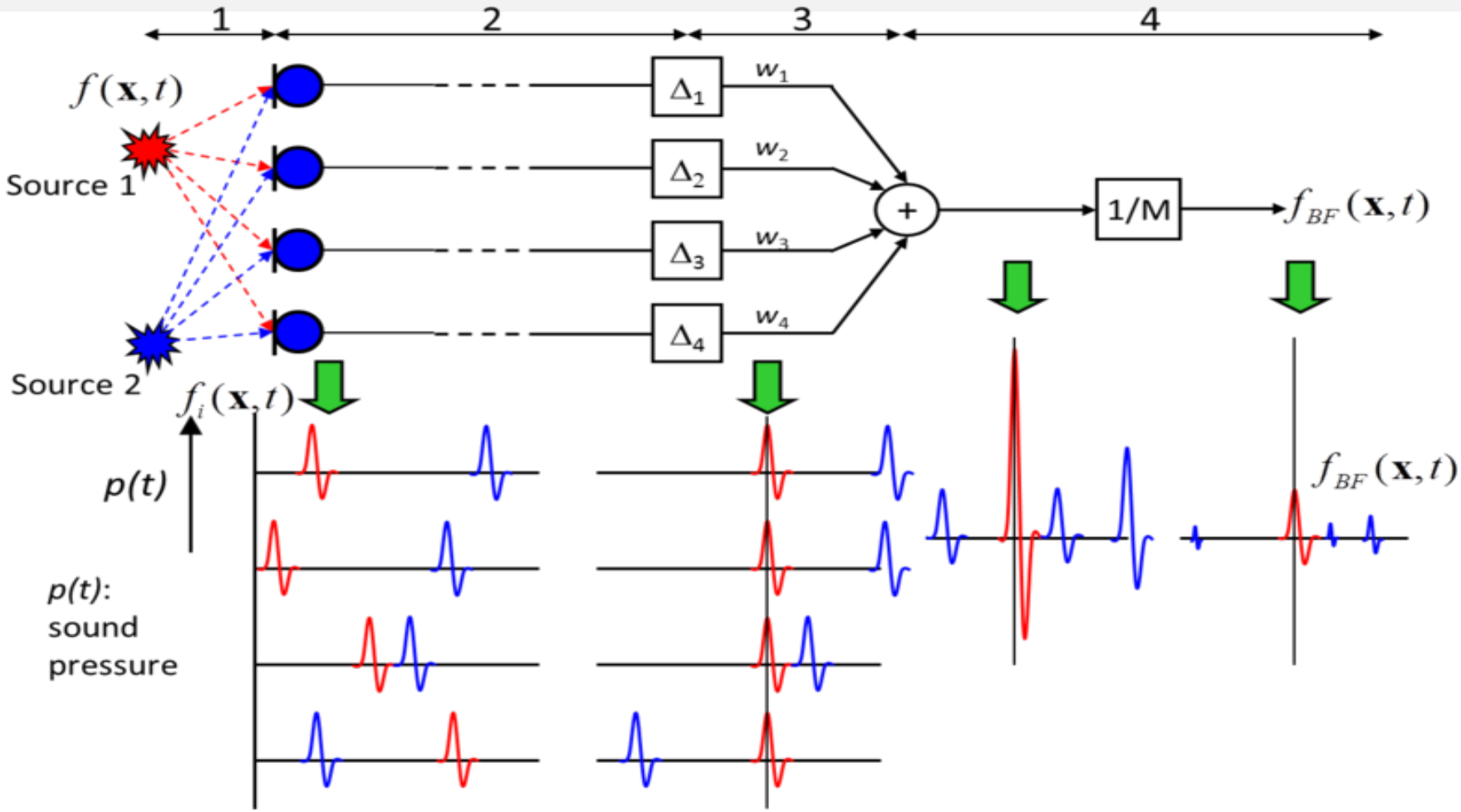

Delay the output of the sensors appropriately and enable constructive addition of the copies to get SNR improvement over white noise
In the presence of an interferer will use FIR filters at the output to cancel or suppress interference

Time-Delay Estimation: Preliminaries[1]

$r_{x_1x_2}[m] = E(x_1[n+m]x_2^*[n])$ and from LTI systems theory we know the cross-power spectrum is given by

$$S_{y_1y_2}(e^{j\omega}) = \sum_{m=-\infty}^{\infty} r_{y_1y_2}[m]e^{-j\omega m} = H_1(e^{j\omega})H_2^*(e^{j\omega})S_{x_1x_2}(e^{j\omega})$$

$S_{y_1y_1}(e^{j\omega})$ is the power spectrum which is real and positive.
If we are given data, we can divide the data into L blocks of length N and estimate the cross-power spectrum using the FFT

[1] Carter, G. Clifford. Coherence and time delay estimation: an applied tutorial for research, development, test, and evaluation engineers. IEEE, 1993.

Time Delay Estimation

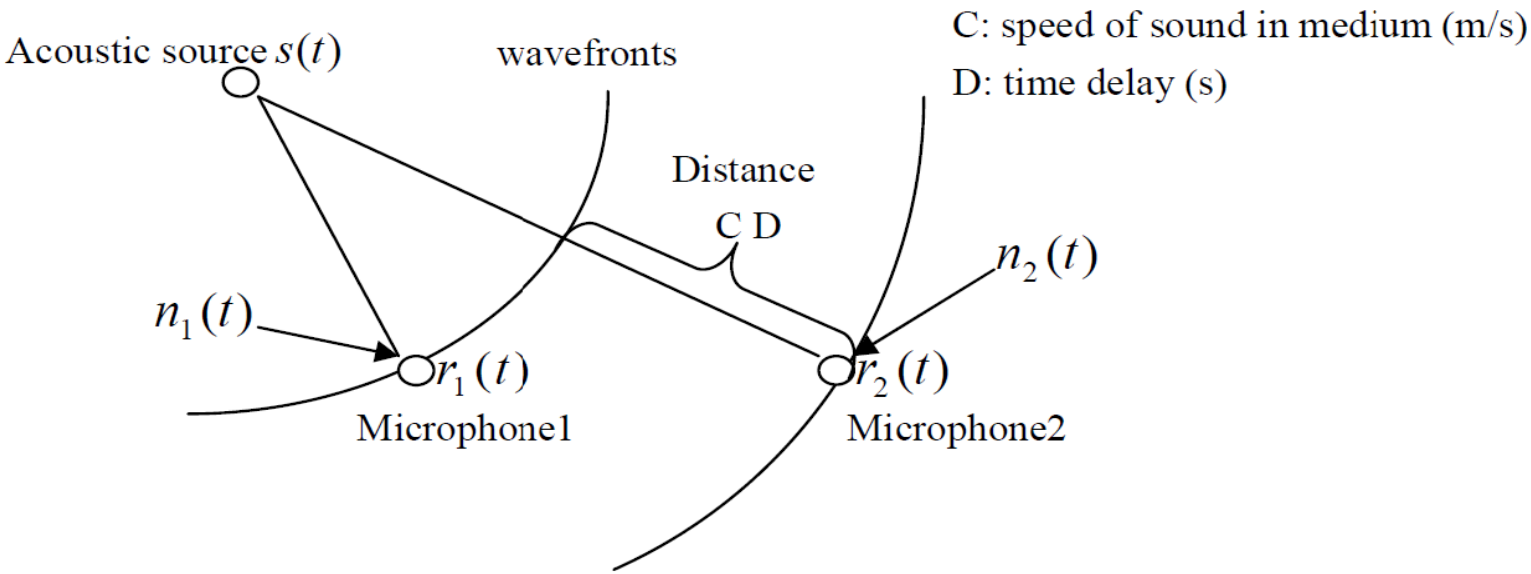

$$
\begin{aligned}
y_1[n] &= r_1(nT) = s[n] + z_1[n] \\
y_2[n] &= r_2(nT) = s[n-D] + z_2[n]
\end{aligned}
$$

Assuming the noises are uncorrelated, $r_{y_2 y_1}[m] = r_{ss}[m-D]$.

$$
\hat{D} = \arg\max_m r_{y_2 y_1}[m] = \arg\max_m \frac{1}{2\pi} \int_{-\pi}^{\pi} S_{y_2 y_1}(e^{j\omega}) e^{j\omega m} d\omega
$$

The peak is sharp if $s[n]$ is a white noise sequence and in the absence of reverberation/multipath.

Generalized Cross-Correlation (GCC) Methods

$$\hat{D} = \arg\max_m \frac{1}{2\pi} \int_{-\pi}^{\pi} \phi(e^{j\omega}) S_{y_2 y_1}(e^{j\omega}) e^{j\omega m} d\omega$$

Cross-Correlation Method: $\phi(e^{j\omega}) = 1$
The purpose of $\phi(e^{j\omega})$ is to whiten the signal and/or weight the spectrum based on the SNR in the frequency domain. Note that $S_{y_2 y_1}(e^{j\omega}) = S_{ss}(e^{j\omega}) e^{-j\omega D}$.
PHAse Transform (PHAT): $\phi(e^{j\omega}) = \frac{1}{|S_{y_2 y_1}(e^{j\omega})|}$
Smoothed COherence Transform (SCOT): $\phi(e^{j\omega}) = \frac{1}{\sqrt{S_{y_1 y_1}(e^{j\omega}) S_{y_2 y_2}(e^{j\omega})}}$
Maximum-Likelihood (ML): $\phi(e^{j\omega}) = \frac{1}{|S_{y_2 y_1}(e^{j\omega})|} \frac{|\gamma_{y_2 y_1}(e^{j\omega})|^2}{1 - |\gamma_{y_2 y_1}(e^{j\omega})|^2}$ where

$$\gamma_{y_2 y_1}(e^{j\omega}) = \frac{S_{y_2 y_1}(e^{j\omega})}{\sqrt{S_{y_1 y_1}(e^{j\omega}) S_{y_2 y_2}(e^{j\omega})}}, 0 \leq |\gamma_{y_2 y_1}(e^{j\omega})| \leq 1, \forall \omega$$

is the coherence function.

Adaptive Broadband Beamformer[2]

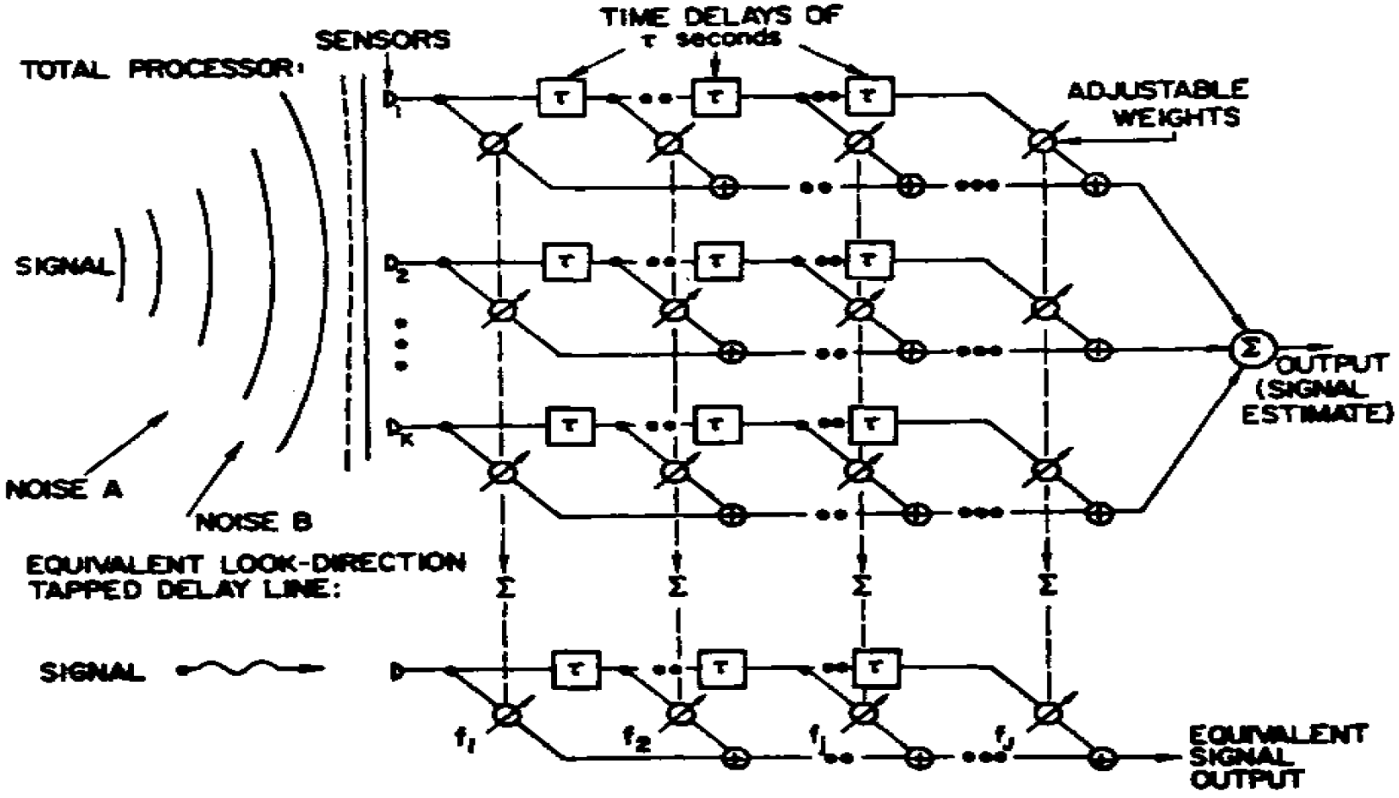

Fig. 1. Broad-band antenna array and equivalent processor for signals coming from the look direction.

[2]Frost, Otis Lamont. "An algorithm for linearly constrained adaptive array processing." Proceedings of the IEEE 60.8 (1972): 926-935.

Wideband BF Formulation

Number of sensors: $N = K$, number of taps, i.e. order of FIR filters is J.

If we denote the input measurement vector as $\mathbf{x}[n]$, then the data in the tap delay line is $[\mathbf{x}[n], \mathbf{x}[n-1], \ldots, \mathbf{x}[n-J+1]]$

Weights: Using vector notation, the weights in the tap delay line are $[W_0, W_1, \ldots, W_{J-1}]$, where $W_k = [w_{k,0}, w_{k,1}, \ldots, w_{k,N-1}]$.

Key Question: How to characterize and design such an array?

Characterization: Frequency-Wavenumber Response

Extension of the MPDR formulation: Look direction constraint plus minimize output power

Frequency Wavenumber Response

If the source signal is $s(t) = e^{j\Omega t}$ from direction $\mathbf{k}$, then the signal received at sensor l is delayed relative to the origin by τ_l.

$$x_l(t) = s(t) = e^{j\Omega(t-\tau_l)} \text{ or } x_l[n] = x_l(nT) = e^{j\Omega(nT-\tau_l)} = e^{j\omega(n-\tilde{\tau}_l)}$$

where $\omega = \Omega T$ and $\tilde{\tau}_l = \frac{1}{T}\tau_l$.
Output of sensor l is given by

$$x_l[n] \to H_l(z) \to y_l[n] = e^{j\omega(n-\tilde{\tau}_l)} H_l(e^{j\omega})$$

The array output

$$y[n] = \sum_{l=0}^{N-1} y_l[n] = \sum_{l=0}^{N-1} e^{j\omega(n-\tilde{\tau}_l)} H_l(e^{j\omega}) = e^{j\omega n} \sum_{l=0}^{N-1} e^{-j\omega\tilde{\tau}_l} H_l(e^{j\omega}) = e^{j\omega n} B(\omega, \mathbf{k})$$

$B(\omega, \mathbf{k}) = \sum_{l=0}^{N-1} e^{j-\omega\tilde{\tau}_l} H_l(e^{j\omega})$ is the frequency-wavenumber response of array

Time-Domain Formulation

Beamformer output

$$y[n] = W_0^T \mathbf{x}[n] + W_1^T \mathbf{x}[n-1] + \ldots + W_{J-1}^T \mathbf{x}[n-J+1] = \sum_{k=0}^{J-1} W_k^T \mathbf{x}[n-k]$$

Constraints: Define $\mathbf{1} = [1, 1, \ldots, 1]^T$, a vector in R^N.

$$\sum_{m=0}^{N-1} w_{k,m} = f_k \text{ or } \mathbf{1}^T W_k = f_k, k = 0, 1, \ldots, J-1$$

This is equivalent to look direction transfer function constraint of

$$H_d(z) = F(z) = f_0 + f_1 z^{-1} + \ldots + f_{J-1} z^{-(J-1)} = \sum_{m=0}^{J-1} f_m z^{-m}$$

Frost Beamformer

Stacking all the BF weights and the constraints into large vectors of dimension NJ, we have

$$y[n] = \mathbf{W}^T\mathbf{X}[n], \text{ where } \mathbf{W} = [W_0^T, W_1^T, \ldots, W_{J-1}^T]^T$$

and $\mathbf{X}[n] = [\mathbf{x}^T[n], \mathbf{x}^T[n-1], \ldots, \mathbf{x}^T[n-J+1]]^T$.
The output power is $E(y^2[n]) = \mathbf{W}^T\mathbf{R}_{xx}\mathbf{W}$ where $\mathbf{R}_{xx} = E(\mathbf{X}[n]\mathbf{X}^T[n])$.
The constraints are given by

$$\mathbf{C}^T\mathbf{W} = \mathbf{f} \text{ or } \begin{bmatrix} \mathbf{1}^T & \mathbf{0} & \ldots & \mathbf{0} \\ \mathbf{0} & \mathbf{1}^T & \ldots & \mathbf{0} \\ \vdots & \vdots & \vdots & \vdots \\ \mathbf{0} & \mathbf{0} & \ldots & \mathbf{1}^T \end{bmatrix} \mathbf{W} = \begin{bmatrix} f_1 \\ f_2 \\ \vdots \\ f_{J-1} \end{bmatrix}$$

The optimization problem is

$$\min_{\mathbf{W}} \mathbf{W}^T\mathbf{R}_{xx}\mathbf{W} \text{ subject to } \mathbf{C}^T\mathbf{W} = \mathbf{f}$$

Using Lagrange multipliers, we can show

$$\mathbf{W}_o = \mathbf{R}_{xx}^{-1}\mathbf{C}(\mathbf{C}^T\mathbf{R}_{xx}^{-1}\mathbf{C})^{-1}\mathbf{f}$$

GSC structure

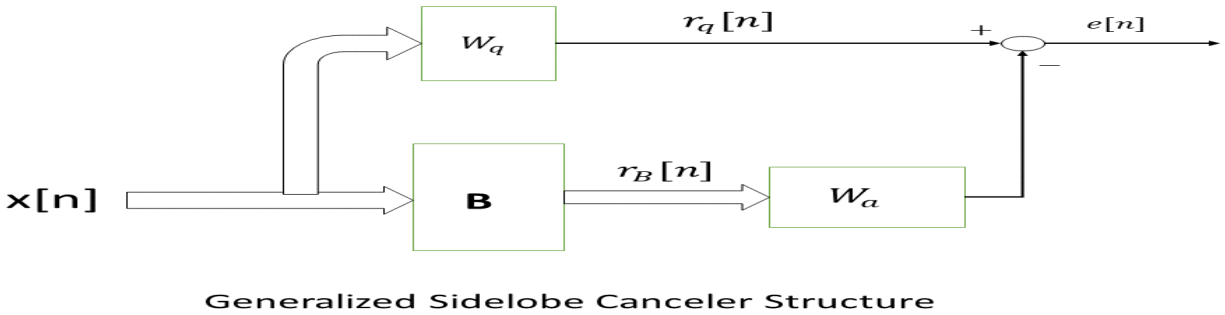

Because of the symmetric nature of the constraints with respect to time $\mathbf{1}^T W_k = f_k$, i.e. the constraint matrix $\mathbf{1}$ is the same, the constraint can be implemented first followed by filtering. Our $W_q = \frac{1}{N}[1, 1, \ldots, 1]^T$ and our B matrix is an orthonormal set of vectors orthogonal to W_q. If $N = 8$, a choice for B is from the Haar basis

$$B = \begin{bmatrix} 1 & 0 & 0 & 0 & 1 & 0 & 1 \\ -1 & 0 & 0 & 0 & 1 & 0 & 1 \\ 0 & 1 & 0 & 0 & -1 & 0 & 1 \\ 0 & -1 & 0 & 0 & -1 & 0 & 1 \\ 0 & 0 & 1 & 0 & 0 & 1 & -1 \\ 0 & 0 & -1 & 0 & 0 & 1 & -1 \\ 0 & 0 & 0 & 1 & 0 & -1 & -1 \\ 0 & 0 & 0 & -1 & 0 & -1 & -1 \end{bmatrix}$$

GSC Implementation of Adaptive Broadband BF[3]

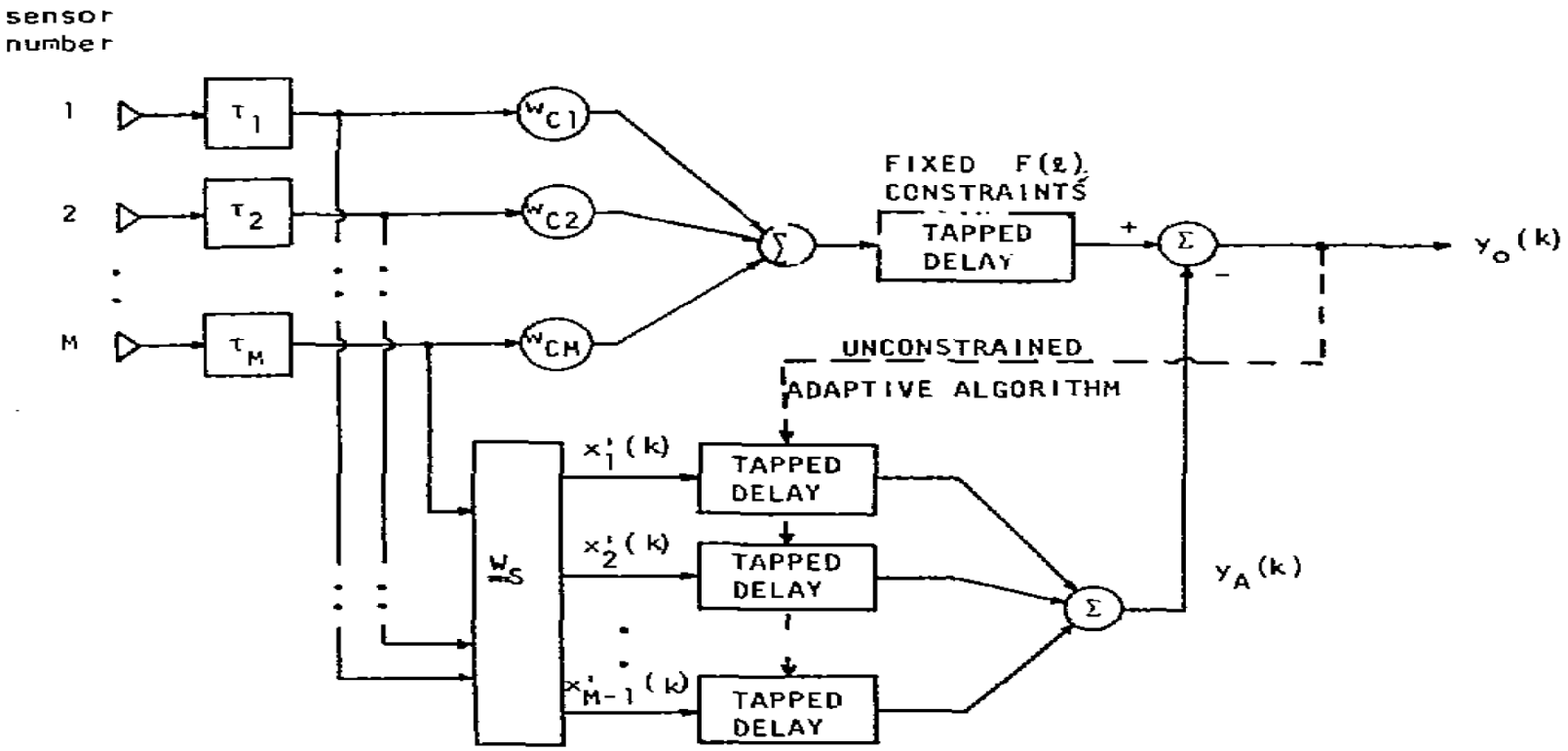

Fig. 4. Generalized sidelobe canceling form of linearly constrained adaptive array processing algorithm.

[3]Griffiths, Lloyd, and C. W. Jim. "An alternative approach to linearly constrained adaptive beamforming." IEEE Transactions on antennas and propagation 30.1 (1982): 27-34.

Broadband via Narrowband processing

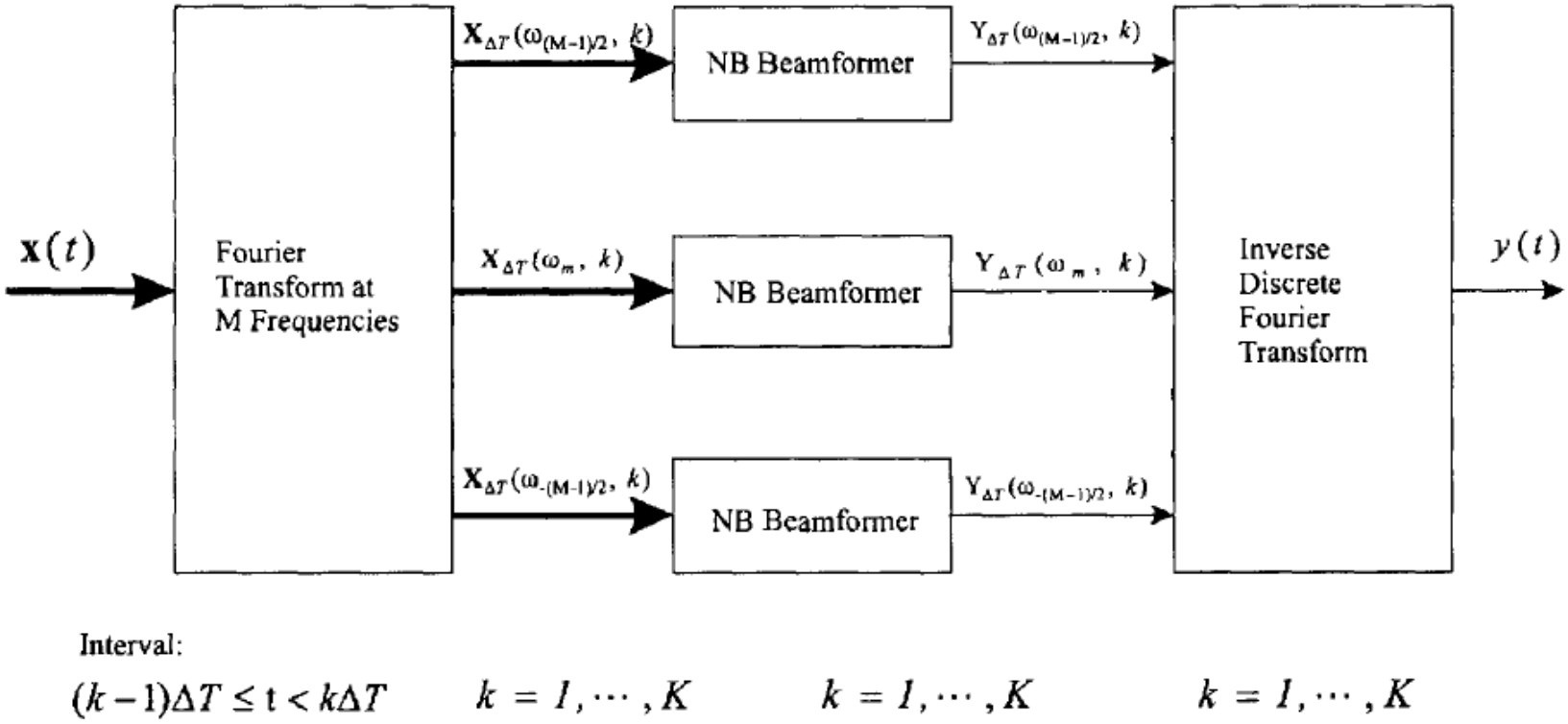

Figure 5.1 Frequency-domain beamformer.

Narrow-band modeling at the output of each band

$$\mathbf{x}(\omega_c, n) = \mathbf{V}(\omega_c, \mathbf{k}_s)F_s[\omega_c, n] + \sum_{l=1}^{D-1} \mathbf{V}(\omega_c, \mathbf{k}_l)F_l[\omega_c, n] + \mathbf{Z}[\omega_c, n]$$

Assumptions

- $F_s[\omega_c, n]$, $F_l[\omega_c, n], l = 1, .., D-1$, and $\mathbf{Z}[\omega_c, n]$ are zero mean
- $E(|F_s[\omega_c, n]|^2) = p_s(\omega_c)$, and $E(|F_l[n]|^2 = p_l(\omega_c), l = 1, \ldots, D-1$, and $E(\mathbf{Z}[\omega_c, n]\mathbf{Z}^H[\omega_c, n]) = \sigma_z^2(\omega_c)\mathbf{I}$
- All the signals/sources are uncorrelated with each other and over time: $E(F_l[\omega_c, n]F_m^*[\omega_c, p]) = p_l(\omega_c)\delta[l-m]\delta[n-p]$ and $E(F_l[\omega_c, n]F_s^*[\omega_c, p]) = 0$
- The sources are uncorrelated with the noise: $E(\mathbf{Z}[\omega_c, n]F_l^*[\omega_c, m]) = \mathbf{0}$
- We also need properties at two distinct center frequencies ω_{c_1} and ω_{c_2}. Usually assumed uncorrelated, e.g. $E(F_l[\omega_{c_1}, n]F_m^*[\omega_{c_2}, p]) = 0$

FFT implementation

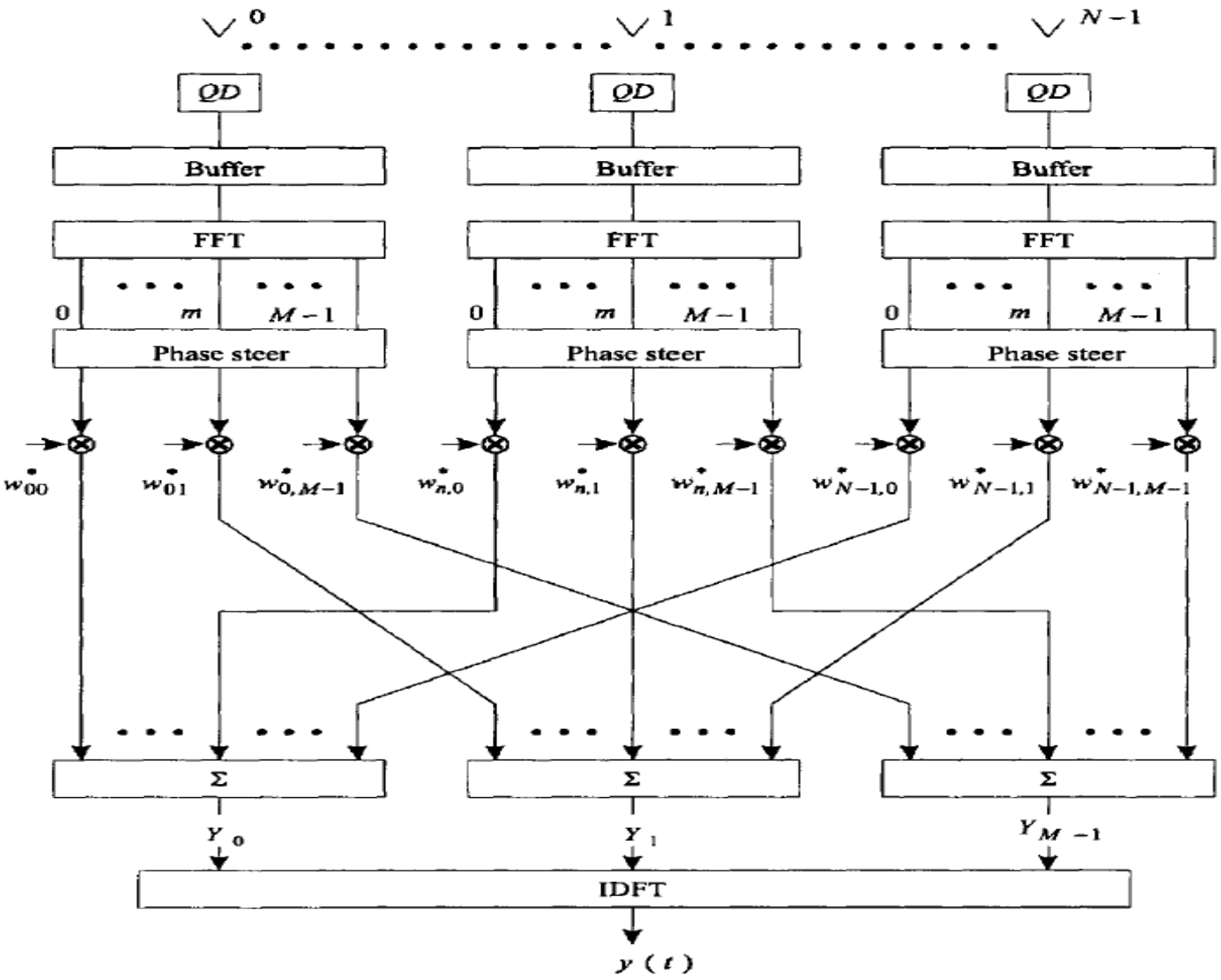

Figure 6.116 FFT processing.

Some Issues to Address

- Source recovery: MPDR or other beamformers on each band followed by inverse FFT. No serious impediments here
- DOA estimation: How do we combine the bands to find an estimate of the DOA. Can independently compute DOA in each band and then combine. Can do DOA estimation by utilizing all the bands together in a synergistic manner. SINR may be different in each band.
- Element spacing: The wavelength has a range $(\lambda_{min}, \lambda_{max})$. How to space the sensors? Non-uniform spacing is an option with some elements at $\lambda_{min}/2$ spacing.

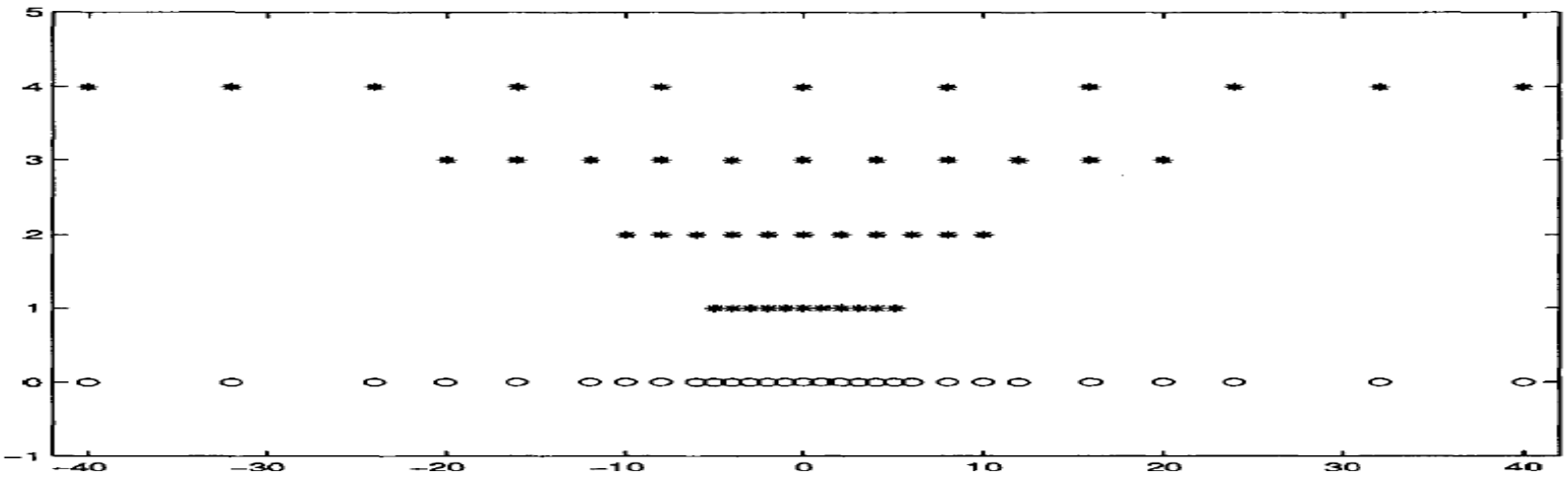

Figure 3.57 Nested arrays.

Independent Component Analysis (ICA)

Bhaskar D Rao
University of California, San Diego
Email: brao@ucsd.edu

ICA

Instantaneous Mixing Model: Assume N sensors, D sources with $D < N$, that are linearly mixed

$$\mathbf{x}[n] = \mathbf{A}\mathbf{s}[n] + \mathbf{Z}[n] or \begin{bmatrix} x_1[n] \\ x_2[n] \\ \vdots \\ x_N[n] \end{bmatrix} = \begin{bmatrix} a_{11} & a_{12} & \dots & a_{1D} \\ a_{21} & a_{22} & \dots & a_{2N} \\ \vdots & \vdots & \vdots & \vdots \\ N1 & a_{N2} & \dots & a_{ND} \end{bmatrix} \begin{bmatrix} s_1[n] \\ s_2[n] \\ \vdots \\ s_D[n] \end{bmatrix} + \mathbf{Z}[n]$$

Problem: Both mixing matrix $\mathbf{A}$ and sources $\mathbf{s}[n]$ are unknown. From measurements of $\mathbf{x}[n], n = 0, 1, ..., L-1$, recover $\mathbf{A}$ and $\mathbf{s}[n]$.
Assumptions:

- Sources are zero mean, i.e. $E(s_l[n] = 0, l = 1, .., D$.
- Sources are uncorrelated, i.e. $E(\mathbf{s}[n]\mathbf{s}^T[n]) = \text{diag}(p_l)$.
- Sources are independent, i.e. $p(s_1, s_2, .., s_D) = \Pi_{l=1}^{D} p_l(s_l)$.
- Sources are non-Gaussian distributed except for possibly one.

ICA relies on independence and non-Gaussian source assumption.

ICA and Applications[1]

More general model is Convolutive Mixing: $x_l[n] = \sum_{k=1}^{D} h_{lk}[n] * s_k[n]$

ICA has several practical applications:

- The "cocktail party problem": separation of voices or music or sounds
- Sensor array processing, e.g. radar
- Biomedical signal processing with multiple sensors: EEG, ECG, MEG, fMRI
- Telecommunications: e.g. multiuser detection in CDMA
- Financial and other time series
- Noise removal from signals and images
- Feature extraction for images and signals
- Brain modelling

[1] Hyvarinen, A., Karhunen, J., & Oja, E. (2004). Independent component analysis (Vol. 46). John Wiley & Sons.

Cocktail Party Problem

The simple "Cocktail Party" Problem

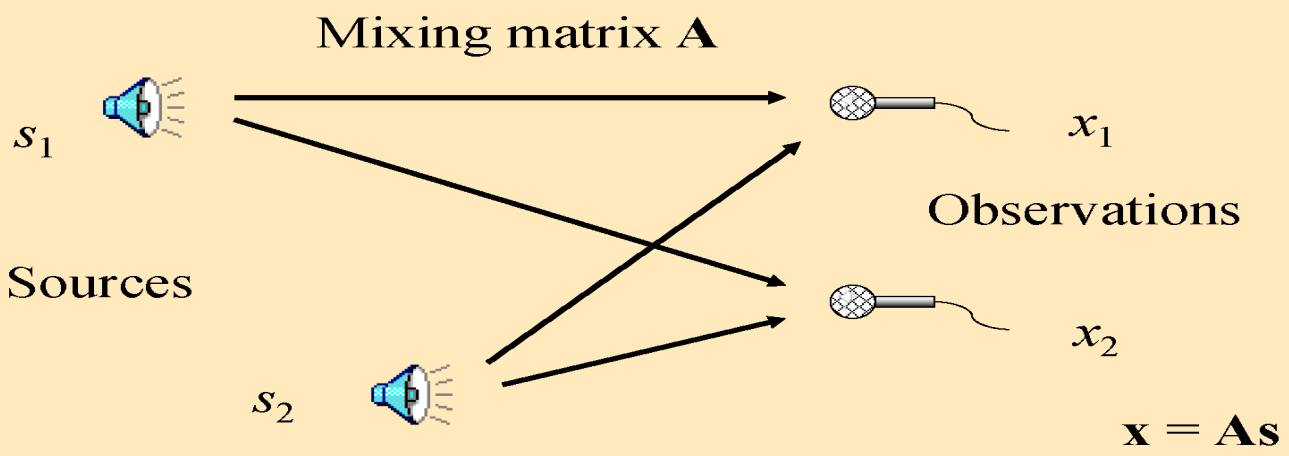

n sources, m=n observations

ICA and EEG Processing[2]

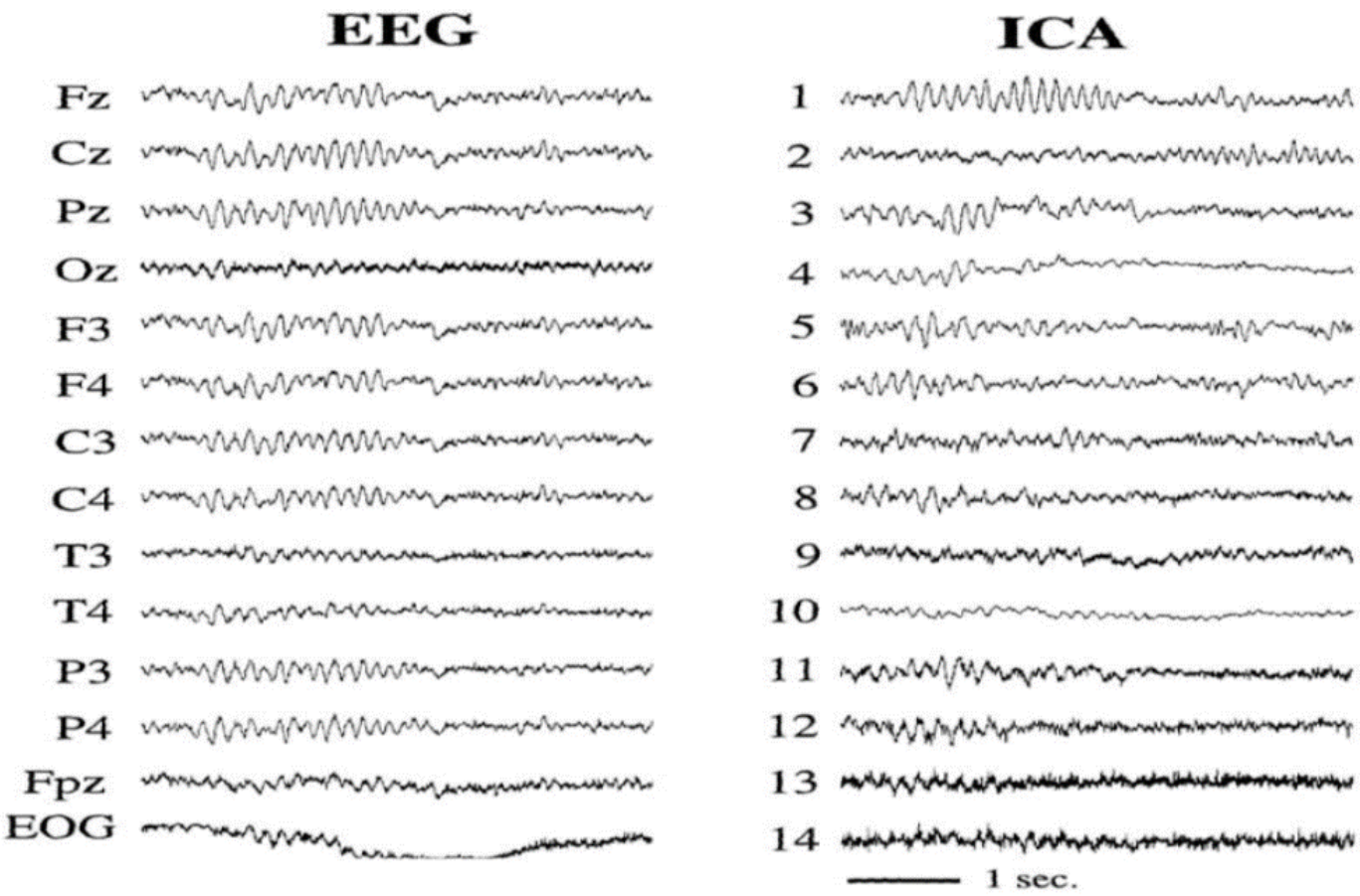

Figure 1: Left: 4.5 seconds of 14-channel EEG data. Right: an ICA transform of the same data, using weights trained on 6.5 minutes of similar data from the same session.

[2]Makeig, S., Bell, A. J., Jung, T. P., & Sejnowski, T. J. (1996). Independent component analysis of electroencephalographic data. In Advances in neural information processing systems (pp. 145-151).

Principal Component Analysis(PCA)

PCA is a data representation/ compression technique: Finds an efficient low-dimensional orthonormal basis to represent a random vector in a mean squared sense.

$$\mathbf{R}_{xx} = E(\mathbf{x}[n]\mathbf{x}^H[n]) = APA^H + \sigma_z^2\mathbf{I}, \text{ where } P = \text{diag}(p_l)$$

Eigen-decomposition should allow us to find the number of sources D and the noise variance.
Let us assume $N = D$ and $\sigma_z^2 = 0$.
Problem: Find an orthonormal basis W for a p-dimensional subspace ($p \leq N$), i.e $W \in C^{N\times p}$ and $W^H W = \mathbf{I}_{p\times p}$, such that $E(|W^H\mathbf{x}[n]|^2)$ is maximized.

$$\max_{W\in C^{N\times p}, W^H W=\mathbf{I}_{p\times p}} W^H\mathbf{R}_{xx}W$$

Solution (PCA): $W = [\mathbf{q}_1, .., \mathbf{q}_p]$, where $\mathbf{q}_l$ is an eigenvector of $\mathbf{R}_{xx}$ corresponding to the lth largest eigenvalue. The approximation for $\mathbf{x}[n]$ is obtained as

$$\hat{\mathbf{x}}[n] = WW^H\mathbf{x}[n]$$

PCA cont'd

If $\mathbf{E} = [\mathbf{q}_1, .., \mathbf{q}_N]$, then $\mathbf{R}_{xx} = \mathbf{E}\Lambda\mathbf{E}^H$, is an eigen-decomposition where $\Lambda = \text{diag}(\lambda_l)$ contains the ordered eigenvalues, i.e. $\lambda_1 \geq \lambda_2 ... \geq \lambda_N \geq 0$.
Then $B = \Lambda^{-\frac{1}{2}}\mathbf{E}^H$ is a whitening matrix, i.e. $B\mathbf{R}_{xx}B^H = \mathbf{I}_{N\times N}$ and $\mathbf{y}[n] = B\mathbf{x}[n]$ has uncorrelated components.
If B is a whitening matrix, QB is also a whitening matrix where Q is an orthonormal matrix and $\mathbf{y}_Q[n] = QB\mathbf{x}[n]$ also has uncorrelated components.
Implications

- Gaussian sources are not separable: If the sources ($\mathbf{s}[n]$) are Gaussian, $\mathbf{y}[n]$ and $\mathbf{y}_Q[n]$ represent independent Gaussian sources. Non-unique
- Uncorrelated property is not enough to separate sources

Need Independent and Non-Gaussian sources: The goal is to find Q, the remaining unknown.